New *JWS* Disabled Persons Toilet System (DPTSG6)

Supply Voltage 8-30Vdc
Switches voltage is the same as supply voltage
Lock voltage is the same as supply voltage
Operator relay contacts are volt free (Open going Closed)
Aux Relay contacts are volt free and follow the 'Vacant/Engaged' sequence
YOU MUST CONNECT THE DOOR STATUS TERMINALS or A DOOR CONTACT FOR PROPER OPERATION
Solid LED indicates the system is 'Vacant'
Slow flashing LED indicated the system is 'Engaged'
Fast flashing LED indicates lock circuit has been interrupted (possibly by emergency over ride)

SW 1 configuration switch

1ON	1 2 3 4	**NEW** secure always locked facility
1OFF		Unlocked 'Classic' facility
2ON	1 2 3 4	**NEW** Operator (e.g. slider) control of the lock
2OFF		DPTSG6 control of the lock
3ON	1 2 3 4	**NEW** Impulse latch (operator impulse hold for 60sec (entry), 15sec (exit) unless reset)
3OFF		2 second operator impulse
4ON	1 2 3 4	**NEW** Second slave unit facility
4OFF		Master unit

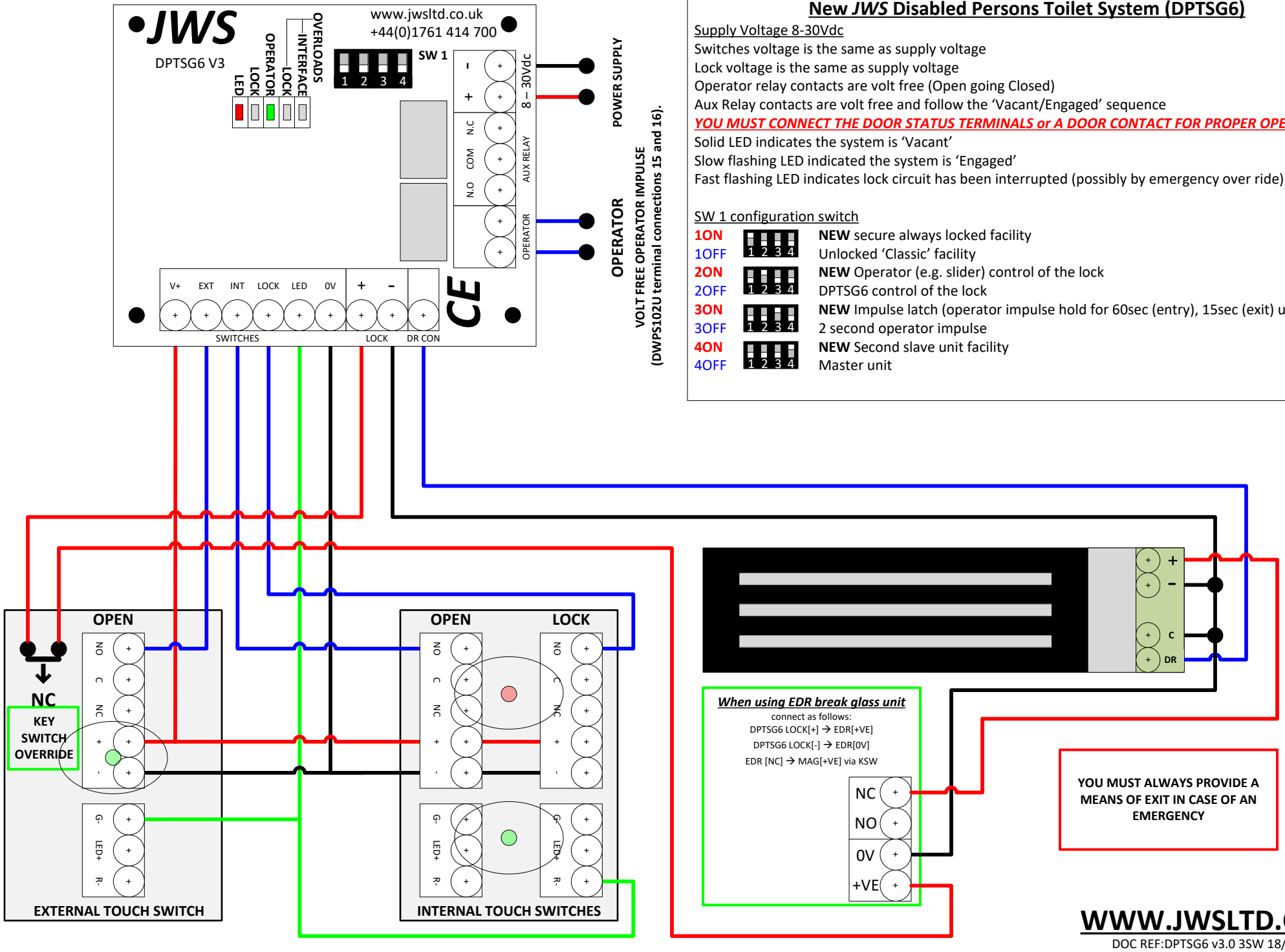

WWW.JWSLTD.CO.UK

DOC REF:DPTSG6 v3.0 3SW 18/03/2019